No.	Part No.	Type	English Description	Q'ty

DB-36 Air cooled Spare parts list

INFORMATION:

1	Notice: Pictures shown are for reference only and does not mean that this photo is exact part, the same photo maybe used in other parts lists, if shows the parts and not the design or specification
2	THIS MANUAL JUST FOR YOUR REFERENCE TO ORDER SPARE PARTS FOR THE MODEL OF AGB-36 Air cooled 2011 EDITION
3	**PLS WRITE DOWN THE QUANTITY OF THE PARTS YOU WANT TO ORDER IN THE COLUMN OF "Order qty.".**
4	**PLS TURN TO THE COLUMN OF "Remark" WHEN YOU THINK IT IS NECESSARY TO KEEP OUR AFTER MARKET OFFICER INFORMED.**
5	**IF THE PARTS THAT ARE NOT LISTED, BUT YOU WOULD LIKE TO ORDER , PLS FILL OUT THE PARTS NAME IN THE BOTTOM OF THIS SHEET.**
6	**PLS DON'T MAKE ANY CHANGE TO THE ORIGINAL INFO SHOWN IN THIS SHEET!**
7	**WE ARE VERY APPRECIATE YOUR ORDERING PARTS WITH THIS SHEET.**
8	**PRICE TERM: EX WORKS (EXCEPT LOAD WITH CONTAINER ORDER)**

目录 INDEX

	PAGE	DESCRIPTION
	1	汽油机总成 ENGINE ASSY.
	2	化油器 CARBURETOR
	3	电器件（电起动） ELECTRIC(E-START)
	4	脚踏操纵件 PEADL CONTROLLER
	5	手把操纵件 HANDLE CONTROLLER
	6	空滤器/排气消声器 AIR FILTER/MUFFLER
	7	油箱/油开关 FUEL TANK/FUEL COCK
	8	前减震 FR.DAMPER
	9	车体盖 SEAT/PLASTICS
	10	车架 FRAME
	11	前轮/前碟刹 FR.WHEEL/FR.BRAKE ASSY.
	12	后轮/后碟刹 RR.WHEEL/RR.BRAKE ASSY.
	13	方向把/方向柱 HANDLE BAR/STEERING STEM
	14	后叉 RR.SWING ARM

汽油机总成 ENGINE ASSY.

序号	件号	规格型号	英文名称	数量
No..	Part No.	Type	English Description	Q'ty
1	2100307000620	36C-立上电手.风冷.	ENGINE ASSY.	1

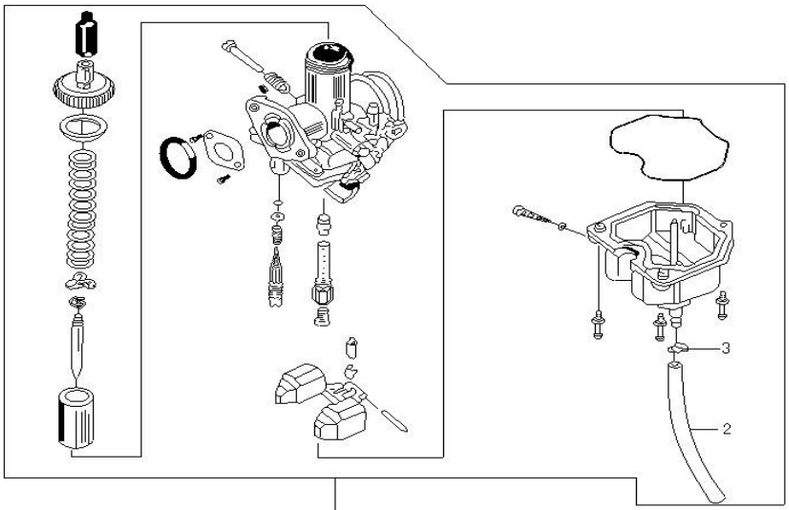

化油器
CARBURETOR

化油器 CARBURETOR				
序号	件号	规格型号	英文名称	数量
No.	Part No.	Type	Description	Qty.
1	1400300060001	PZ30A-1	CARBURETOR	1

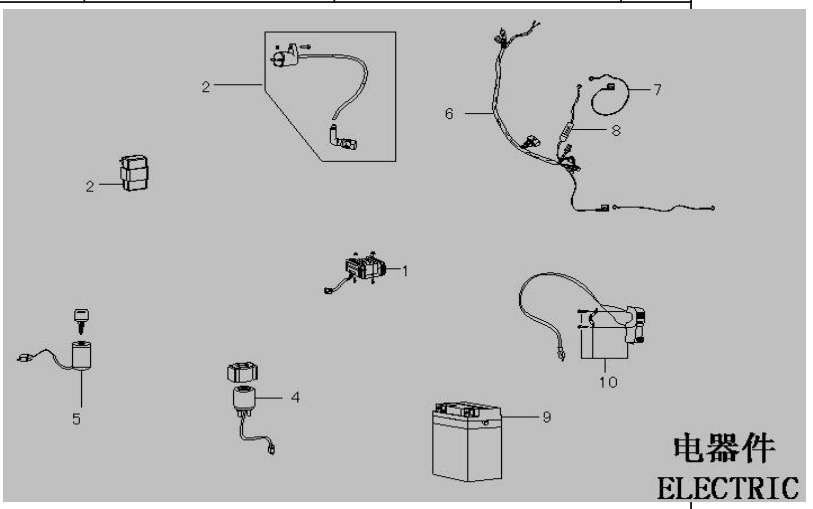

电器件(电起动) ELECTRIC（E-START）				
序号	件号	规格型号	英文名称	数量
No.	Part No.	Type	Description	Qty.
1	1100300020010	30(8级开关-APL-SS8101A)	RECTIFIER	1
2	1100100020010	30-WY125pb	COIL ASSY，IGNITION	1
3	1100400020010	30-CG150CDI	CDI BOX	1
4	1100200010010	通用	STARTING SOLENOID	1
5	1101707040001	31-线长450	IGNITION LOCK	1
6	1100805100001	36越野	HARNEES (E-Start)	1
7	1100806080001	36-380mm	CABLE,BATTERY	1
8	1100807020001	15A	FUSE ASSY.	1
9	1100600142010	12N9(135X75X139)	BATTERY	1
10	1100500010001	电起动-750mm	START SWITCH ASSY(E-START)	1

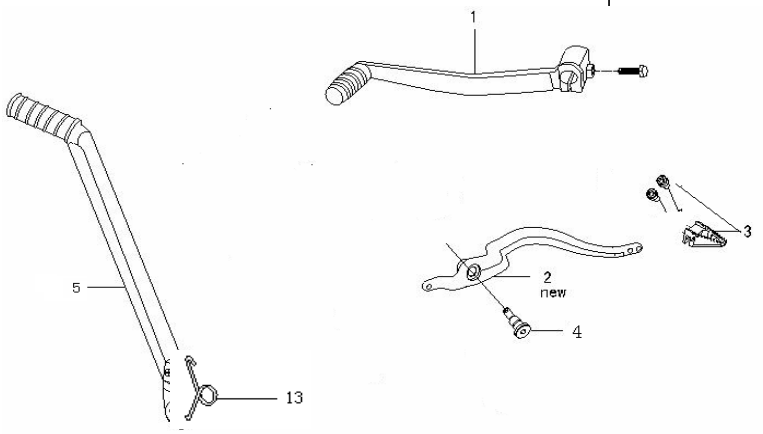

脚踏操纵件
PEDAL CONTROLLER

脚踏操纵件 PEDAL CONTROLLER				
序号	件号	规格型号	英文名称	数量
No.	Part No.	Type	Description	Qty.
1	2020702010201	立式150-250CC(通用)	GEAR SHIFT LEVER	1
2	0701900160410	36-II-M10	RR.BRAKE LEVER.NEW DESIGN	1
3	0500500010501	APL-I	BRAKE LEVER TIP	1
5	0804102031501	36-M10	BOLT（M10)	1
5	2020701010101	立式125-250CC(鑫源.宗申.隆鑫)	KICK STARTER	1
13	0802902020107	36	SPRING	1

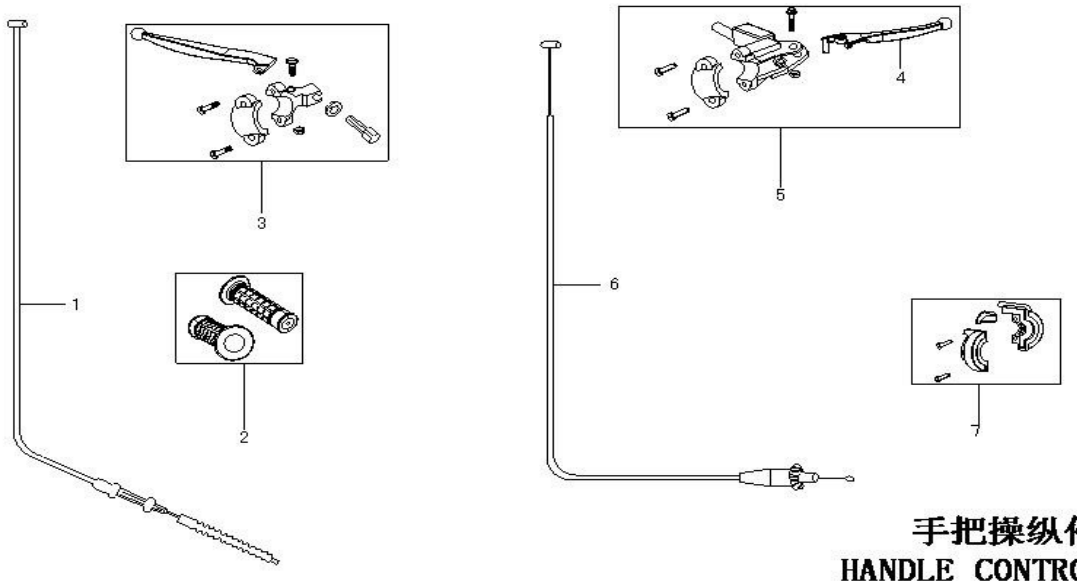

手把操纵件
HANDLE CONTROLLOR

手把操纵件 HANDLE CONTROLLER				
序号	件号	规格型号	英文名称	数量
No.	Part No.	Type	Description	Qty.
1	1401000120001	长1100mm.露120mm	CABLE ASSY，CLUTCH	1
2	0900100070010	APL-II-PPR	GRIP ASSY.	1
3	0100600040501	31-带开关	CLUTCH LEVER ASSY.	1
4	0101200030501	31	FR.BRAKE LEVER ASSY.	1
5	1401513050001	31-带刹车把手	OIL PUMP WITH BRAKE LEVER	1
6	1400900140001	长1000mm.露115mm	THROTTLE CABLE	1
7	0100500010510	APL-I	HOLDER ASSY,THROTTLE	1

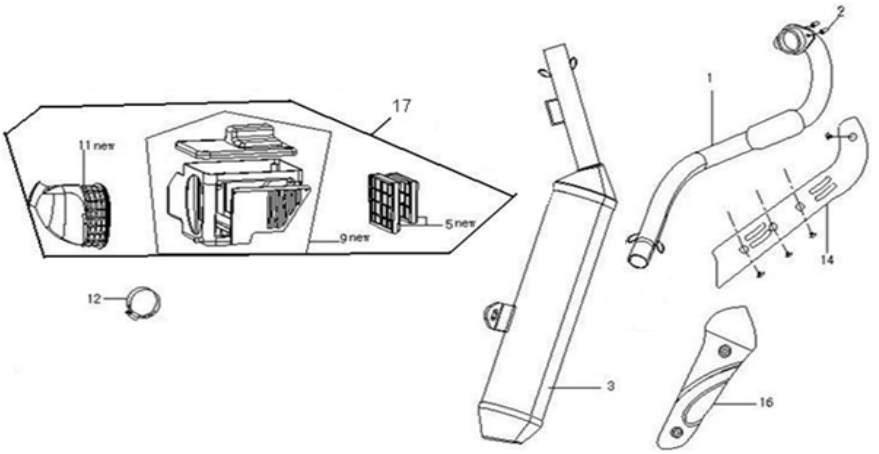

空滤器/排气消声器
AIR FILTER/MUFFLER

空滤器/消声器 AIR FILTER/MUFFLER				
序号	件号	规格型号	英文名称	数量
No.	Part No.	Type	Description	Qty.
1	1401801310111	36越野(250CC.Φ38)抱箍式	EXHAUSE PIPE	1
2	0800501041501	M8X11mm	NUT	2
3	1401802280001	36越野(250CC)抱箍式直排	REAR EXHAUST PIPE	1
5	1400503010001	30D	AIR FILTER	1
9	1003500010010	30D	CASE，AIR FILTER	1
11	0901801020010	30D系列.30EF	AIR INLET PIPE	1
12	1400501041401	38-57	LOCK HOOP，CONNECT PIPE	1
14	1401910060001	36系列	EXHAUST SHIELD	1
14	1401910110001	36系列-菱形冲孔	EXHAUST SHIELD	1
16	1004500010010	36	MUFFLER PROTECT COVER	1
17	310204	A36系列	AIR FILTER ASSY.	1

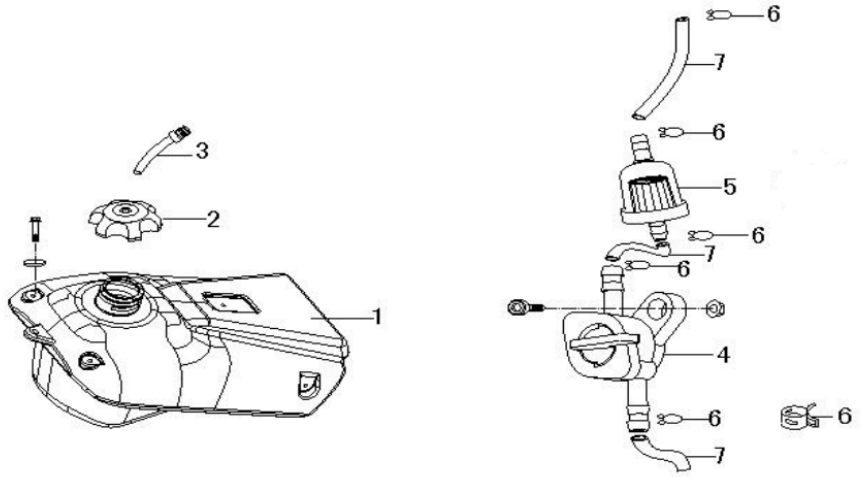

油箱/油开关
FUEL TANK/FUEL COCK

油箱/油开关 FUEL TANK/FUEL COCK				
序号	件号	规格型号	英文名称	数量
No.	Part No.	Type	Description	Qty.
1	1001000200010	36-无孔	FUEL TANK	1
2	1001100010010	通用-塑料	FUEL CAP	1
3	1400600060001	单向高档	FUEL CAP BREATHER HOSE	1
4	1400400010001	29	PET-COCK	1
5	1001800010001	通用	FUEL FILTER	1
6	0704500070107	℄9X8X0.8	HOSE CLAMP	4
7	0901000040010	℄4.5X℄10	FUEL HOSE	1

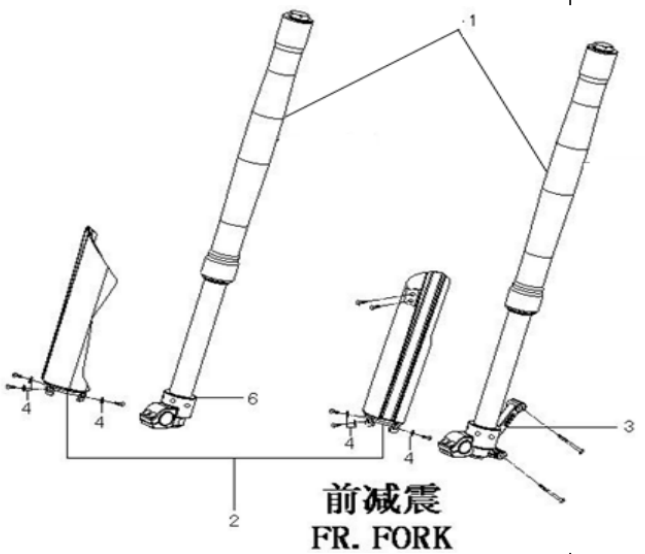

前减震
FR. FORK

前减震 FR.DAMPER				
序号	件号	规格型号	英文名称	数量
No.	Part No.	Type	Description	Qty.
1	1402410010010	31-不可调.910mm.℄54X57mm	ASSY FR.FORK.L	1
2	1000600030010	31	FORK PROTECTIVE COVER	1 PAIR
3	1401208030001	31款	ALUMINIUM TIP OF FRONT SHOCK.	1
4	0820109021401	℄6X℄16X1	WASHER ℄6X℄16X1	6
6	1401209030001	31款	ALUMINIUM TIP OF FRONT SHOCK.	1

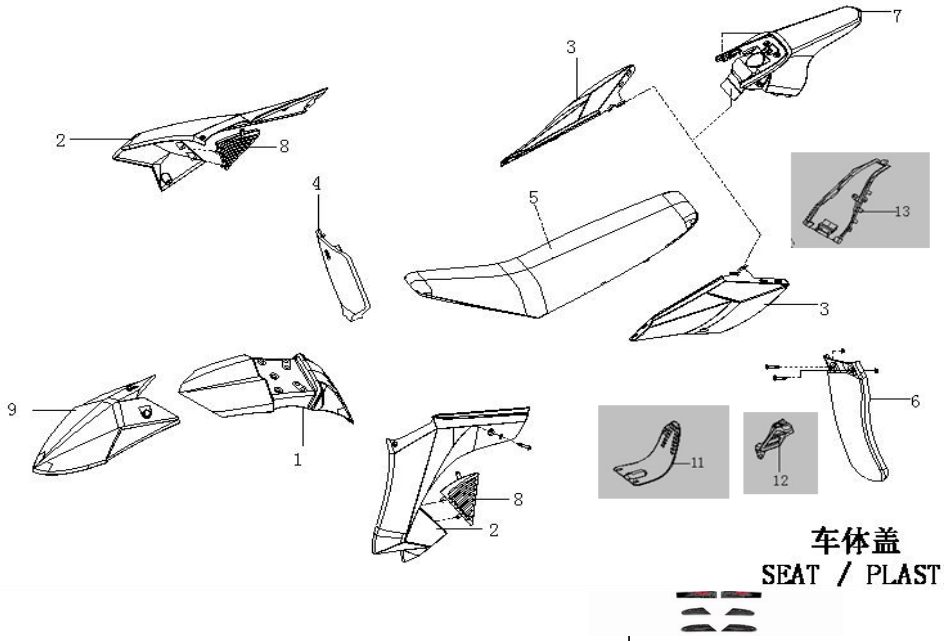

车体盖
SEAT / PLASTICS

车体盖 SEAT / PLASTICS				
序号	件号	规格型号	英文名称	数量
No.	Part No.	Type	Description	Qty.
1	1001501070010	36	FRONT FENDER. REAR PART	1
2	1000200080010	36	FRONT COVER	1 PAIR
3	1000300070010	36	REAR COVER	1 PAIR
4	1000400070010	36	MAME PLATE	1
5	1001200150010	36	SEAT	1
6	1001700020010	31	REAR MUD FLAP	1
7	1000800080010	36	REAR FENDER	1
8	1000210010010	36	FT.LEFT COVER	1
9	1001501090010	36-21/18越野胎	FRONT FENDER. RRONT PART	1
11	1000909010010	36	ENGINE PLATE(PLASTIC)	1
12	1002201010010	36	REAR BRAKE ASSY COVER	1
13	1004700010010	36	REAR MUD COVER	1
14	1002700250010	36-250CC	Stickers(whole set)	1 set

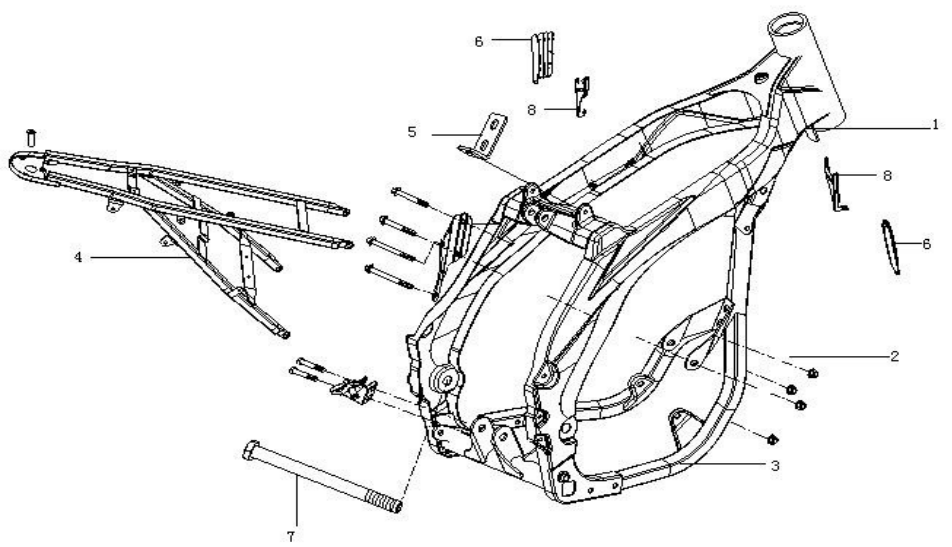

车架
FRAME

车架 FRAME				
序号	件号	规格型号	英文名称	数量
No.	Part No.	Type	Description	Qty.
1	0700100360410	36	FRAME	1
2	0703200030410	36	BRACKET ENGINE	1
3	0703300030410	36	UNDER ENGINE SUPPORT	1
4	0702300170410	36	SUB-FRAME	1
5	0701605020410	36	FUEL TANK BRACKET	1
6	1001400060008	36	AIR DEFLECTORS	1 PAIR
7	0703901230107	M14X1.5X275mm	SWING ARM AXIS	1
8	0702900050410	36	NRACKET OF AIR DEFLECTORS	1 PAIR

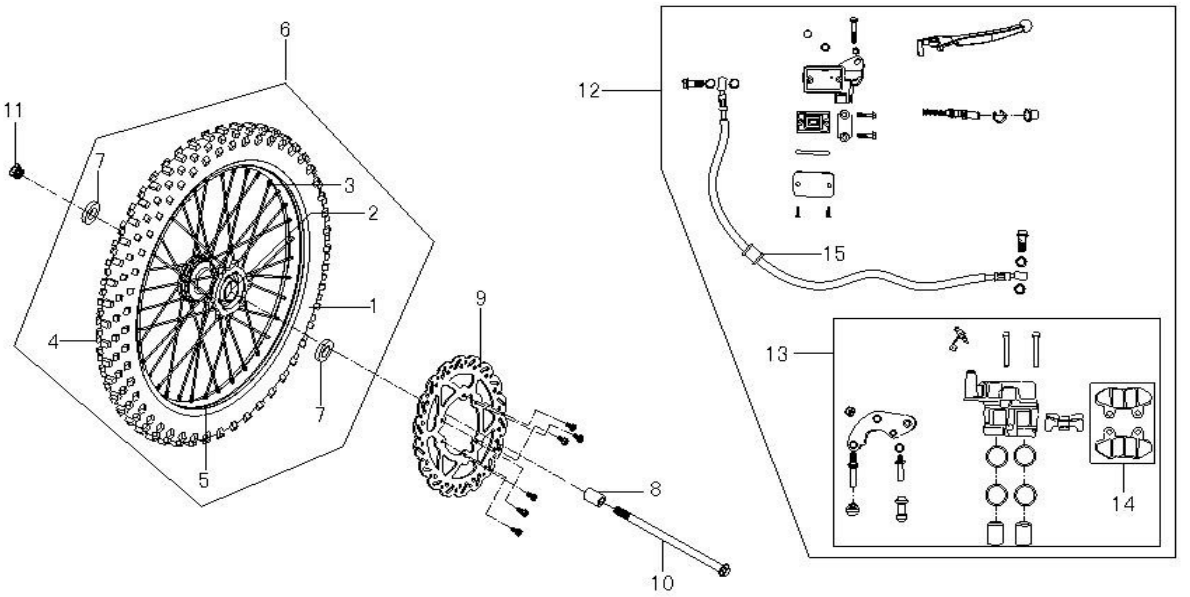

前轮/前碟刹
FR. WHEEL/FR. DISK BRAKE

前轮/前碟刹 FR.WHEEL/FR.BRAKE ASSY.				
序号	件号	规格型号	英文名称	数量
No.	Part No.	Type	Description	Qty.
1	0901201060010	90/90-21(振威)	INNER TUBE 90/90-21	1
2	0501917020501	L-M25-1.85X21(250-6)	FR.HUB 1.85×21 alloy	1
3	1806204100101	21”	SPOKE，FR.WHEEL 21”	36
4	0901100180010	90/90-21(振威)	FR.TIRE 90/90-21	1
5	0901103080010	21”	INNER TUBE PROTECTOR 21”	1
6	1401106080001	90/90-21	FRONT WHEEL	1
7	1806205080010	32X42	OIL SEAL	1 SET
8	0703905060107	∁25.5X∁32X30mm	R.SPACER，FR.WHEEL	1
9	0701301140001	31-H∁270X∁101	FRONT-BRAKE DISK	1
10	0703902160107	M22X1.5X222mm(一代.配液晶仪表	FRONT AXLE	1
11	0803701100107	M22X1.5X23	NUT	1
12	1402050150001	36-管长1300.插片式开关.银把手	FR.DISK BRAKE ASSY.	1
13	1402901040001	31	FR.CALIPER ASSY.	1
14	1401503060009	31前-铜	FR.BRAKE PAD ASSY	1 PAIR
15	0901701070010	31	FR.BRAKE HOSE	1

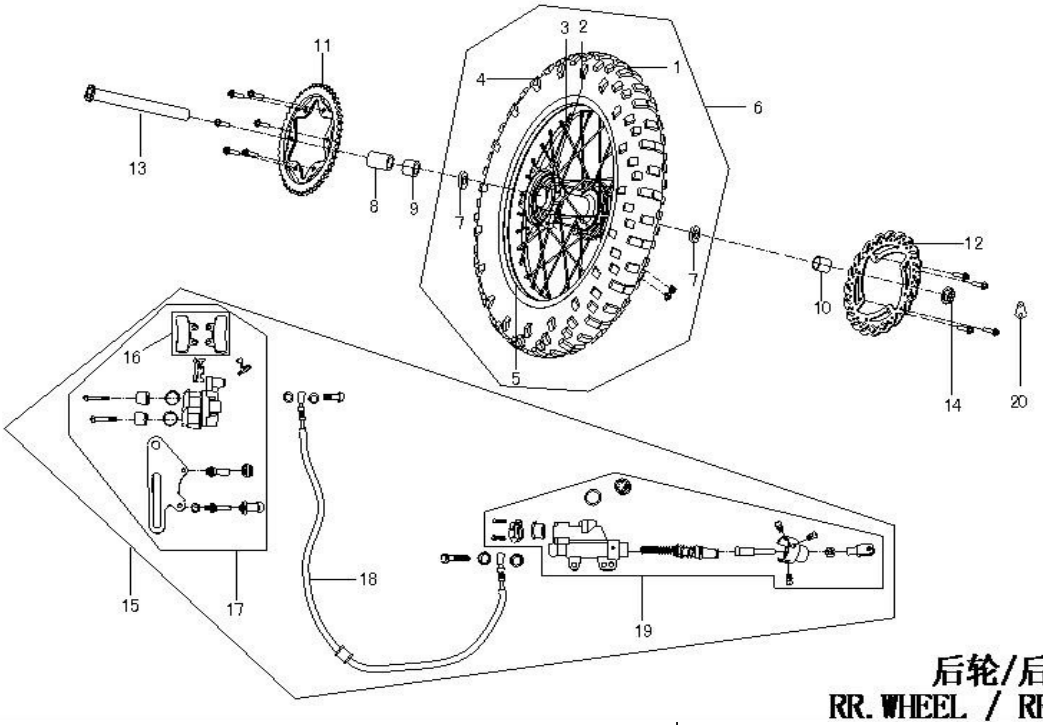

后轮/后制动器
RR. WHEEL / RR. BRAKE

后轮/后制动器 RR.WHEEL/RR. BRAKE ASSY.

序号	件号	规格型号	英文名称	数量
No.	Part No.	Type	Description	Qty.
1	0901201150010	140/80-18(振威)	INNER TUBE 140/80-18	1
2	0501924020501	L-M25-2.5X18(250-6)	ALLOY RIM，RR.HUB 2.5×18	1
3	1806304080101	18”	INNER SPOKE,RR.WHEEL18”	36
4	0901200140010	140/80-18(振威)	RR.TIRE 140/80-18	1
5	0901103060010	18”	INNER TUBE PROTECTOR 18”	1
6	1401713010001	140/80-18	REAR WHEEL	1
7	1806209040010	32X47	OIL SEAL	1 SET
8	0703905070107	℄25.5X℄32X40mm	SPACER	1
8	0703905160107	℄25.5X℄38X40mm(台阶℄38X5m	SPACER	1
9	0703905080107	℄25.5X℄32X17.5mm	SPACER	1
10	0703905170107	℄25.5X℄38X16	SPACER	1
11	0701800160101	530-125X46T	SPROCKET	1
12	0701302140001	31-H℄240X℄121	REAR-DISC	1
13	0703903170107	M24X1.5X265mm	REAR AXLE	1
14	0803701200107	M24X1.5X12	NUT	1
15	1401502150001	36-弯型接头.油管长580mm	REAR BRAKE ASSY.	1
16	1401503070009	31后-铜	RR.BRAKE PAD SET	1 PAIR
17	1402902040001	31	RR .CALIPER ASSY.	1
18	0901702080010	31	RR .BRAKE HOSE	1
19	1402903080001	31.36	RR MASTER CYLINDER ASSY	1

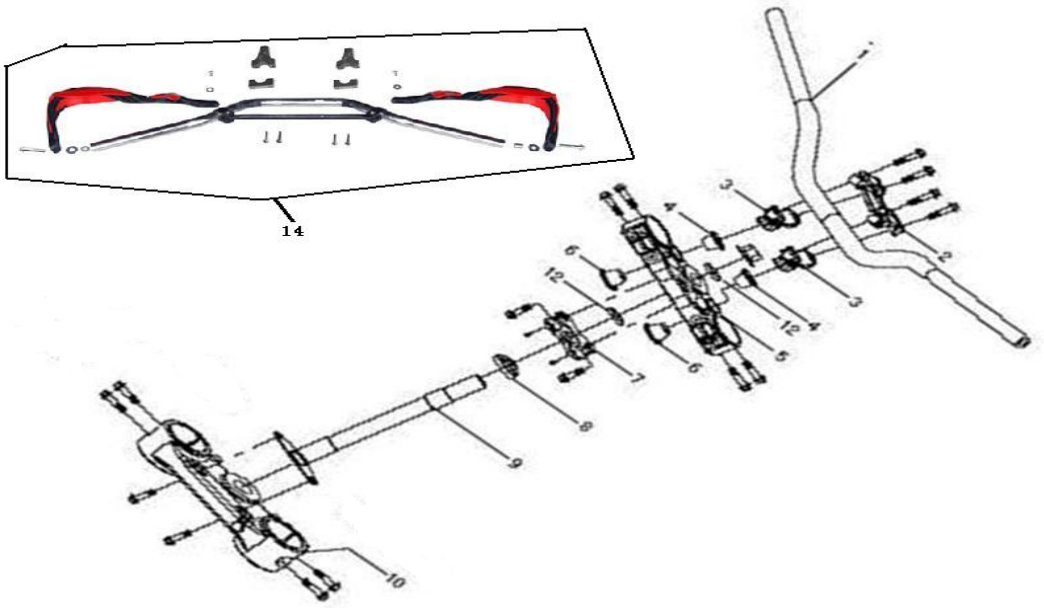

方向把/方向柱
HANDLE BAR/STEERING STEM

方向把/方向柱 HANDLE BAR/STEERING STEM

序号	件号	规格型号	英文名称	数量
No.	Part No.	Type	Description	Qty.
1	0500100030810	31-℄22mm×810mm	HANDLE BAR	1
2	0100401050810	31	RISER,TOP BRACKET	1
3	0100402050810	31	RISER,BOTTOM	2
4	0900902010010	31	LEATHER OF UP FIX	4
5	0100701120801	36-II 带台阶-铝	TRIPLE CLAMP,TOP	1
6	0701200020201	M25(S32*25*1)	NUT STEERING UPPER	1
7	0701606010410	31	BRACKET FOR SPIGOT LOCK	1
8	0701100030101	M25*1*62	STEERING STEM LOCK NUT	1
9	0701000080107	31-M25×1×280mm	STEERING STEM	1
10	0100702110810	36	TRIPLE CLAMP,BOTTOM	1
12	0803501020101	320/28	BEARING	2
14	360101	31.36系列	Handlebar Guard	1

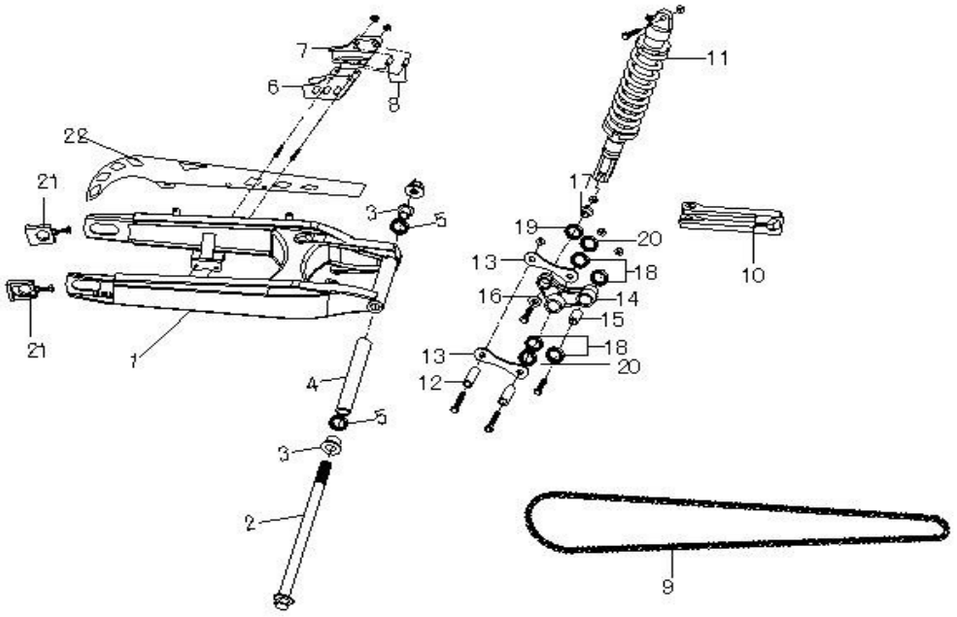

后叉
RR. SWINGARM

后叉 RR.SWINGARM				
序号	件号	规格型号	英文名称	数量
No.	Part No.	Type	Description	Qty.
1	0700200350410	36_铁_（46T越野）	REAR SWING ARM	1
2	0703901230107	M14X1.5X275mm	REAR SWING ARM BOLT	1
3	0703800080107	℄15.5X℄20X18(台阶℄30X3mm)	STEP BEARING	2
4	0710105030107	℄15.5X℄21X170mm	CHAIN-GUIDE INSERT	1
5	0803301040101	HK2016	NEEDLE BEARING	2
6	1401400030410	30	CHAIN GUIDE-BRACKET	1
7	1000700030010	30	CHAIN-GUIDE INSERT	1
8	0710109040107	℄7X℄12X33mm	SPACER	2
9	0701700240001	530-112节	CHAIN	1
10	0900500100010	38-2	BUFFER CHAIN	1
11	1401203490017	30E-可调.435mm*1200LB*℄10*2	REAR SHOCK	1
12	0710103040001	℄12.5X℄18X61mm	SPACER	2
13	0702800020411	36	LOWERING LINK	2
14	0100800010501	30	SUSPENSION LINKAGE	1
15	0710103030001	℄12.5X℄18X40mm	SPACERΦ12×Φ18×40	1
16	0703800290610	℄10X℄16X17(台阶℄25X1.5）	STEP BUSH	1
17	0703800300610	℄10.5X℄16X17(台阶℄16X15mm	STEP BUSH	1
18	0803301010101	HK1812	NEEDLE BEARING HK18126	4
19	0803301030101	HK1616	NEEDLE BEARING HK1612	1
20	0805101020001	℄18X℄26X5mm	DUSTPROOF SEAL	2
21	0702800020410	31	R.ADJUSYER COMP，CHAIN	2
22	1002300040010	半包型	CHAIN COVER	1

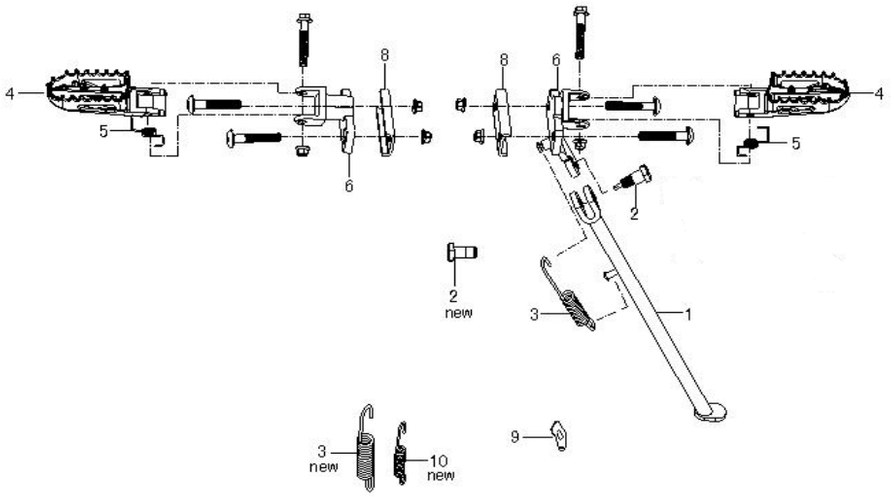

脚蹬/侧支架
FOOT PEG/KICK STAND ASSY

脚蹬/侧支架 FOOT PEGS / SIDE STAND

序号	件号	规格型号	英文名称	数量
No.	Part No.	Type	Description	Qty.
1	0701610070410	直-325mm-双弹簧(开档8.5)	SIDE STAND FOR DOUBLE SPQING	1
2	0804401051501	双弹簧-直	SIDE STAND BOLT (FOR DOUBLE S	1
3	0803202010101	115mm	SPRING,SIDE STAND	1
3	0803203020101	130mm	DOUBLE SPRING,SIDE STAND (OU	1
4	0400100050410	31款	FOOT PEGS	1 PAIR
5	0802901040101	配新款踏脚	SPRING,FOOT PEGS	1 PAIR
6	0300100040410	36-双弹簧-00-04B	FOOT PEG - BRACKET (FOR DOUB	1 PAIR
8	0704400020410	36	BRACKET SUPPORT	2
9	0400101010101	APL-1	SPRING CLIP	1
10	0803203030101	130mm	DOUBLE SPRING,SIDE STAND (INS	1

Extra parts order(for the parts not in this list)

序号	件号	规格型号	英文名称	数量
No.	**Part No.**	Type	**English Description**	**Q'ty**
1				
2				
3				
4				
5				
6				